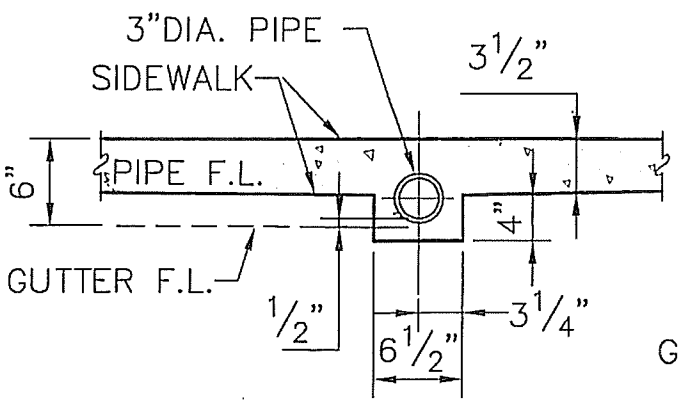

3" DIA. PIPE UNDER WALK

*ONE SECTION OF 1/4" CHECKED PLATE SHALL NOT EXCEED 5' IN LENGTH

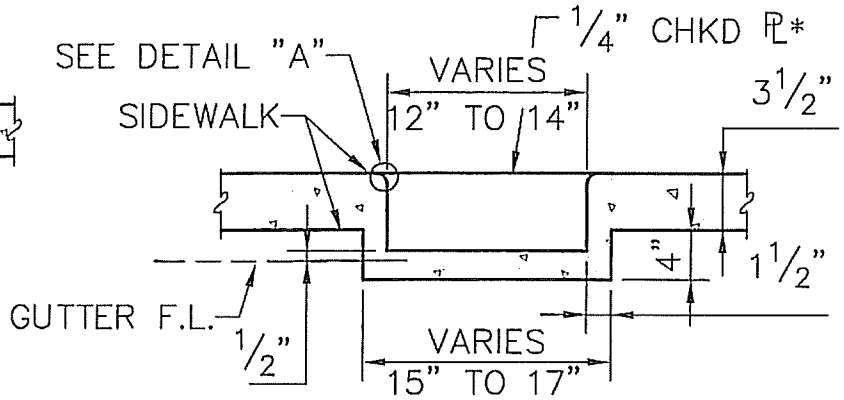

CHANNEL THROUGH WALK

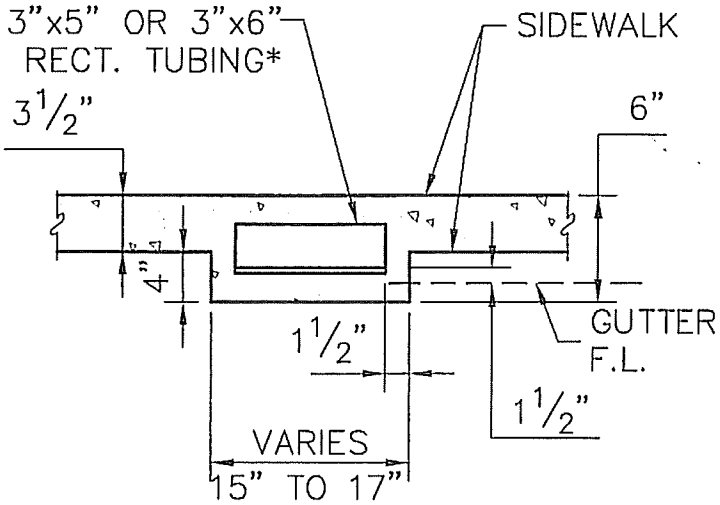

*WALL THICKNESS SHALL BE 3/16"

RECT. TUBING UNDER WALK

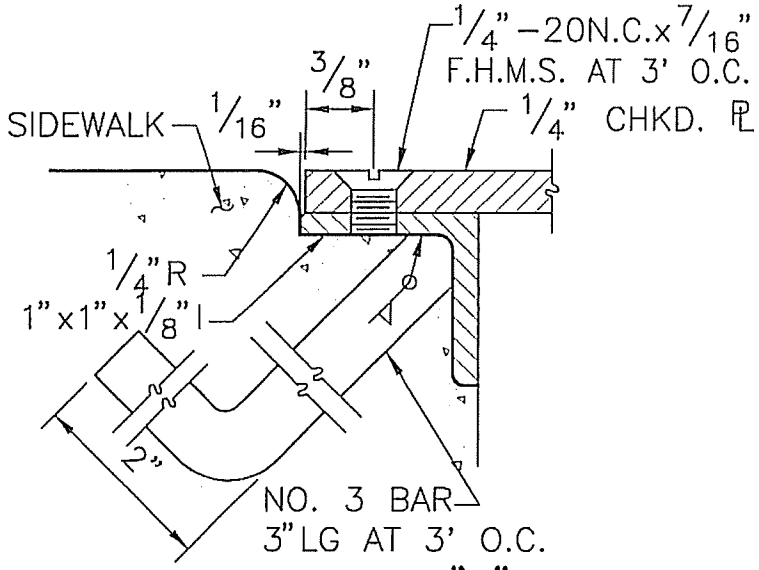

DETAIL "A"

NOTES:

1) NO DRAIN SHALL BE CONSTRUCTED UNDER A DRIVEWAY APPROACH. SIDEWALK DRAINS, EXCEPT FOR 3"x12" & 4"x12" CHANNELS, SHALL BE ANGLED THROUGH SIDEWALK IN DIRECTION OF GUTTER FLOW.
2) CURB DRAINS MAY BE CORE-DRILLED: 3"ø
   A) PERPENDICULAR TO CURB
   B) D.I.P. OR SCH. 80 PVC, FLUSH.

USE 1 ACRE = 200'X200' OR 100'X400'

AREA 3"DIA. PIPE = 7.1 SQ.IN.
AREA 3"x5" RECT. TUBE = 12.3 SQ. IN.
AREA 3"x6" RECT. TUBE = 14.9 SQ. IN.
AREA 4"x14" CHANNEL = 56 SQ. IN.
AREA 3"x12" CHANNEL = 36 SQ. IN.

AREAS TO BE DRAINED FROM PRIVATE PROPERTY TO PUBLIC STREETS

AREA	TYPE OF SURFACE	AREA REQUIRED	SIZE & NO. OF PIPES OR RECTANGULAR TUBE	SIZE & NO OF CHANNELS
2 ACRES 200'x400'	PAVED GRASS	100 SQ. IN. 25 SQ. IN.	2-3"x6" RECT. TUBES	2-4"x14"
1-1/2 ACRES 200'x300'	PAVED GRASS	75 Q.I. 20. SQ. IN.	1-3" PIPE & 1-3"x6" RECT. TUBES	2-3"x12"
1 ACRE 200'x200'	PAVED GRASS	50 SQ. IN. 12 SQ. IN.	1-3"x5" RECT. TUBE	1-4"x14"
3/4 ACRE 150'x200'	PAVED GRASS	40 SQ. IN. 10 SQ. IN.	3-3"x6" RECT. TUBE OR 1-3"x5" RECT. TUBE	1-4"x14"
1/2 ACRE 100'x200'	PAVED GRASS	30 SQ. IN. 6 SQ. IN.	2-3"x6" RECT. TUBE OR 1-3" PIPE	1-3"x12"
1/4 ACRE 100'x100'	PAVED GRASS	16 SQ. IN. 3 SQ. IN.	1-3" PIPE & 1-3"x5" RECT. TUBES	

CITY OF EL CERRITO

Steven E. Strapac DATE: 5/18/01

S. STRAPAC CITY ENG'R., REG. C.E. 57654

TITLE: **SIDEWALK DRAINS**

DATE: MARCH, 2001 | SCALE: N.T.S.

DRAWN: NBD | FILE NO. | SHEET NO. 1 OF 1

CHECKED: SES