TYPE 1 PATCH
(STANDARD, FULL–DEPTH AC TRENCHING)

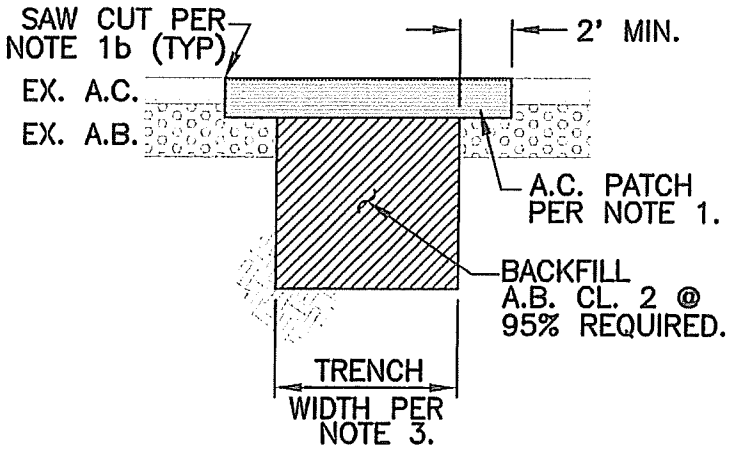

TYPE 2 PATCH
(OPTION 2)

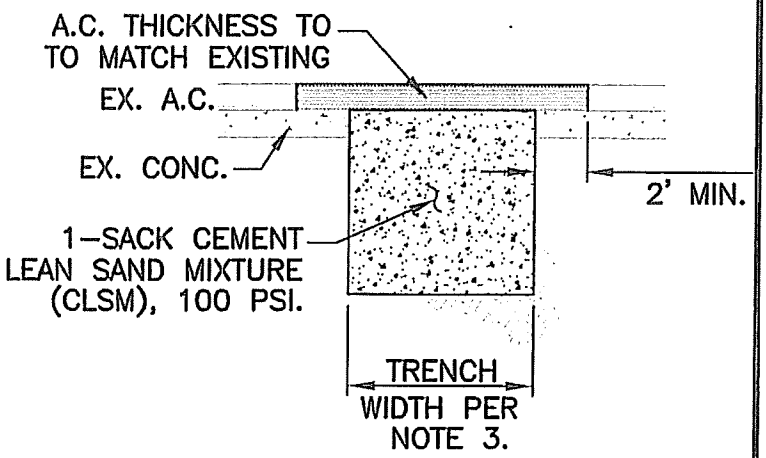

TYPE 2 PATCH
(OPTION 1)

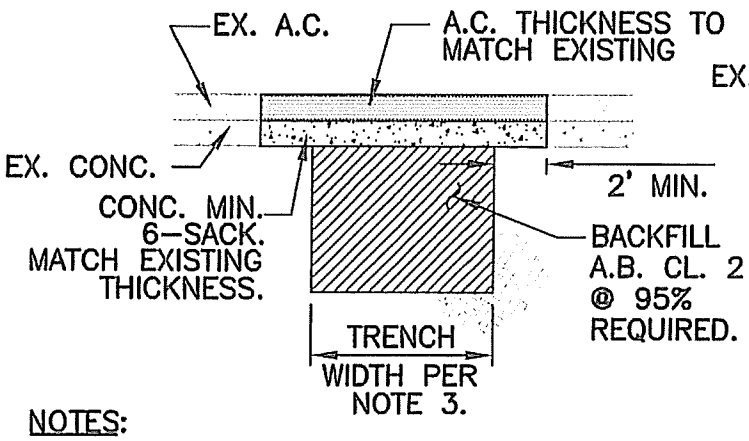

ADJACENT TO GUTTER

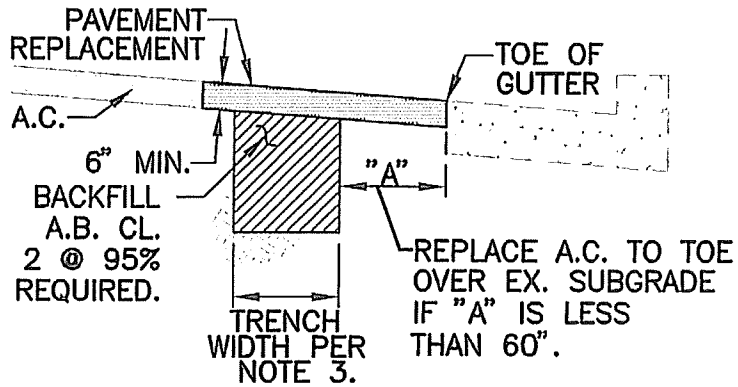

NOTES:

1. TYPE 1 PATCH:
   a) TOTAL AC THICKNESS SHALL BE 6" MINIMUM, APPLIED IN TWO LIFTS.
   b) SAWCUT EDGES SHALL BE TACKED. AFTER ROLLING, PATCH EDGES SHALL BE SEALED, 6" BAND MIN.
   c) AB THICKNESS PER PLANS. AB MAY BE REPLACED BY ADDITIONAL AC (50% OF REQUIRED AB THICKNESS).
2. TYPE 2 PATCH REQUIRED WHEN CONCRETE PAVEMENT IS TRENCHED, EXCEPT WHEN REQUIRED BY THE CITY.
3. NO TRENCH SHALL BE LESS THAN 12" WIDE.
4. CEMENT LEAN SAND MIXTURE (CLSM) MAY BE USED FOR BACKFILL WITH THE PRIOR APPROVAL OF THE CITY ENGINEER.
5. PAVEMENT MARKINGS SHALL BE REPLACED AS NEW. ALL STRIPING SHALL BE THERMOPLASTIC.
6. EMERGENCY TRENCHWORK ON MORITORIUM STREETS REQUIRES FULL LANE–WIDTH SLURRY SEAL.

CITY OF EL CERRITO		TITLE: TRENCH STRUCTURAL SECTION REQUIREMENTS
Steven E Strapac — DATE: 9/12/00		DATE: 9-12-00 / SCALE: NTS
STEVE STRAPAC, P.E. #57654 CITY ENGINEER		DRAWN: RAC / FILE NO. / SHEET NO. 1 OF 1
		CHECKED: SES